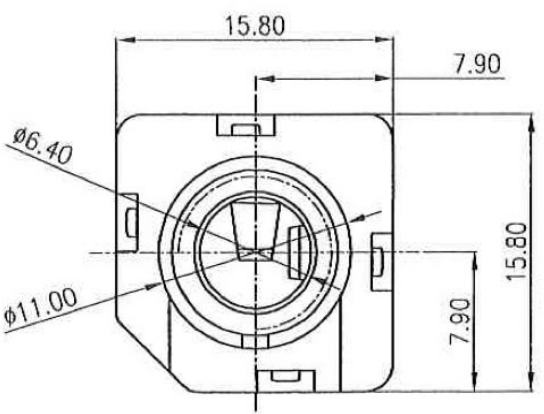
15.80
7.90
ø6.40
ø11.00
15.80
7.90

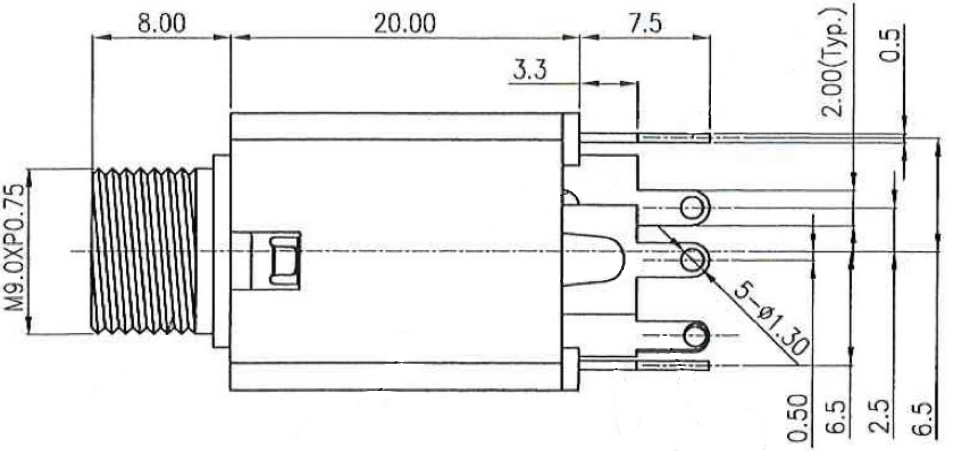
8.00
20.00
7.5
3.3
2.00(Typ.)
0.5
M9.0XP0.75
5-ø1.30
0.50
6.5
2.5
6.5