Palmia

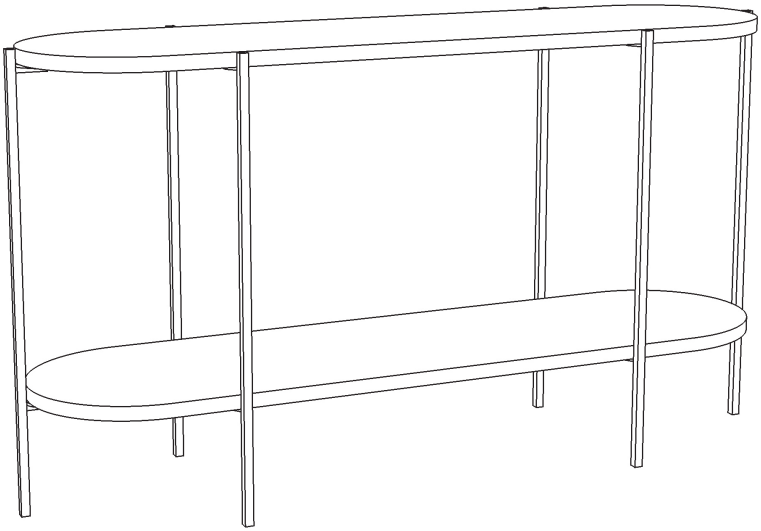

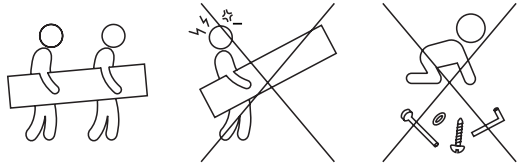

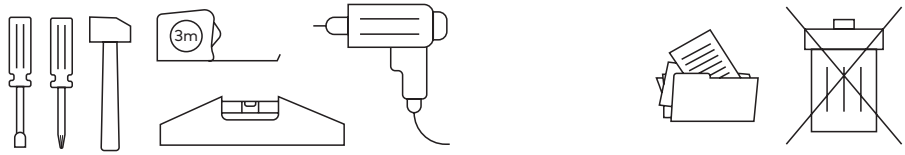
3m

min
max
min
max

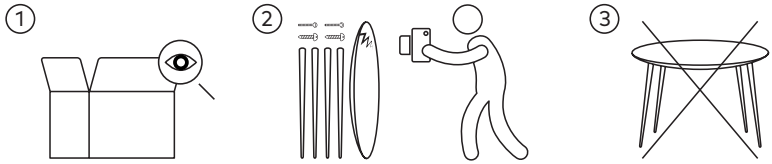
1
2
3

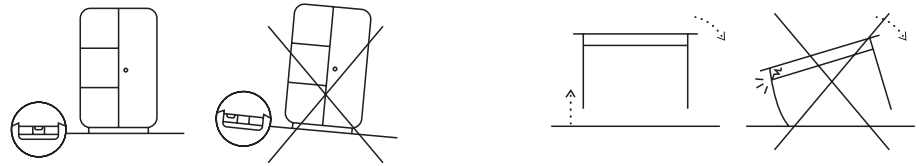

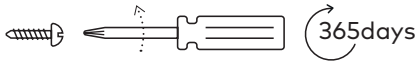
365days

15 MIN

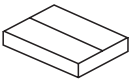

X1

X2

1 x2

2 x2

3 x2

A x20

B x20

C x1

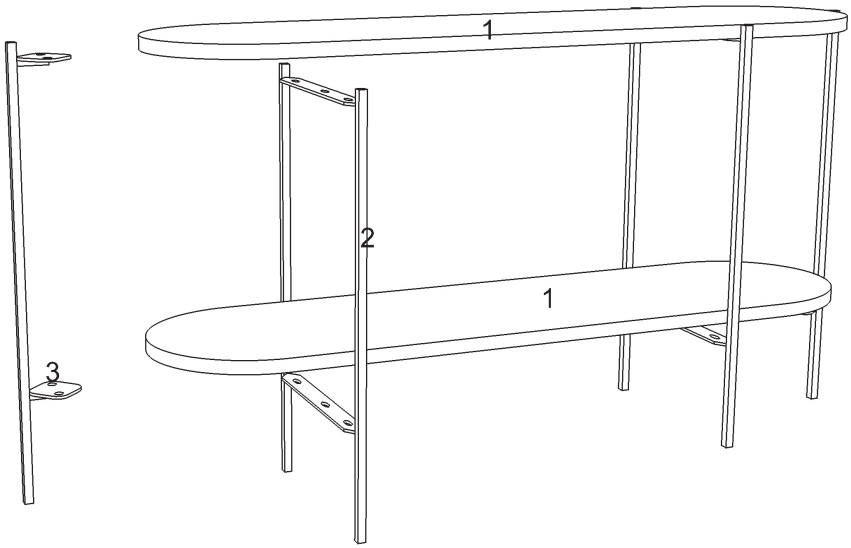
1
2
1
3

1

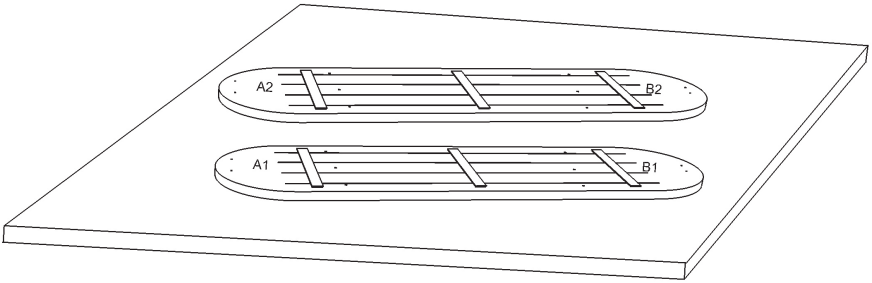

2

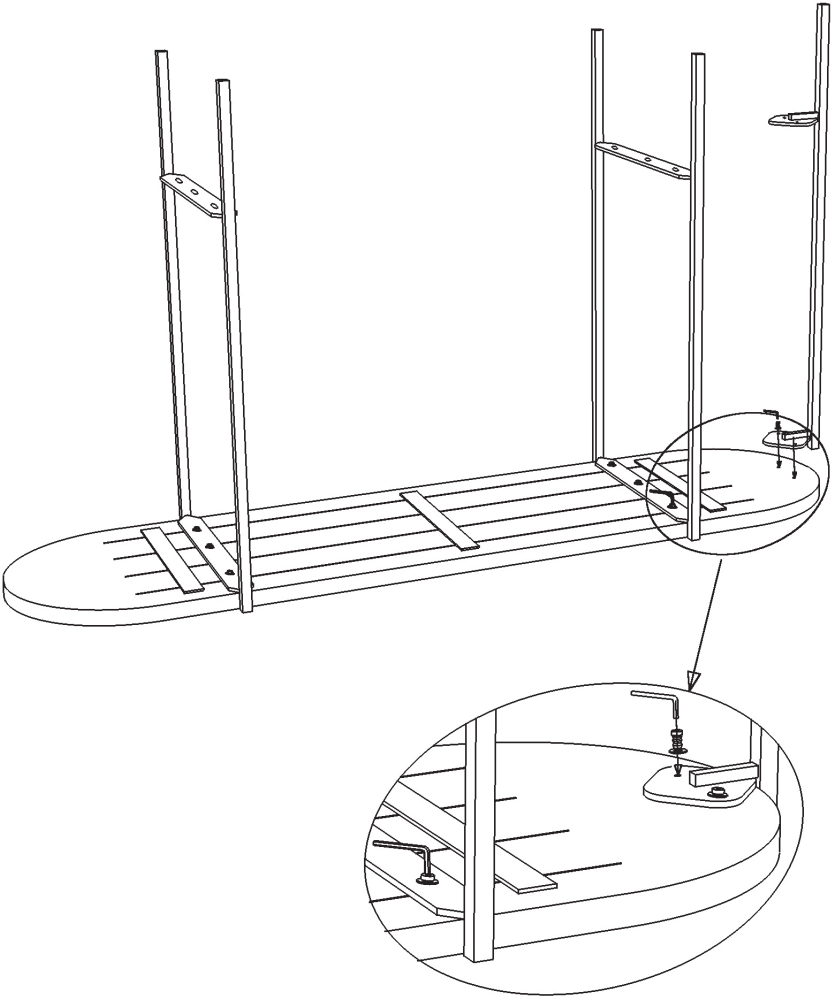

3

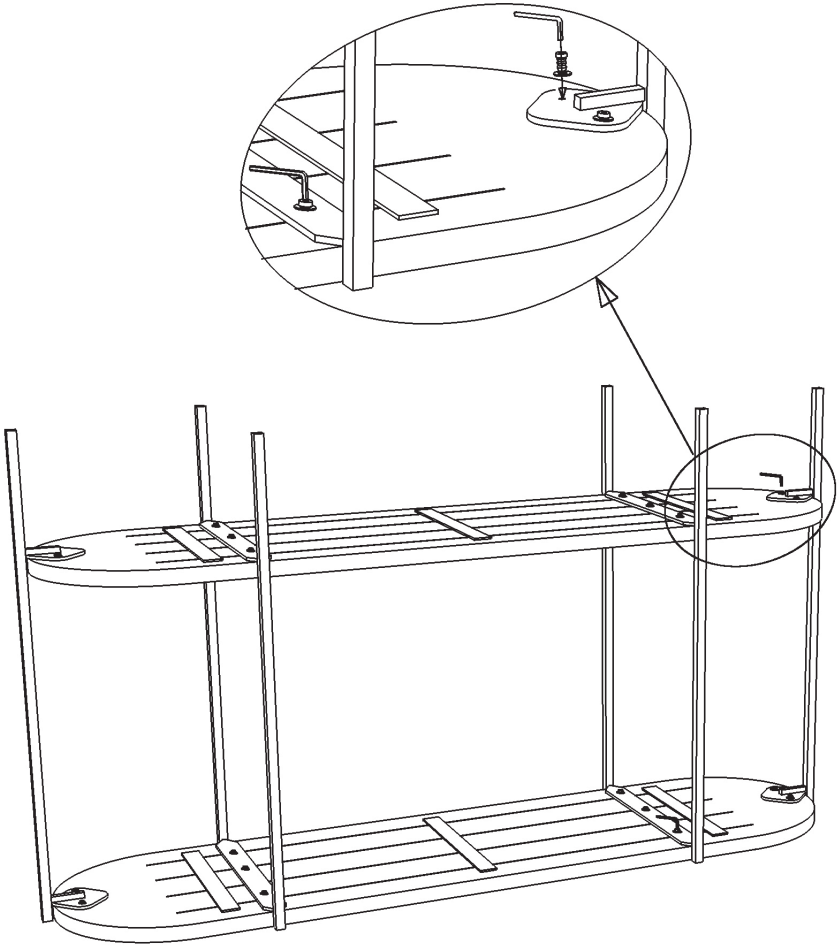

4

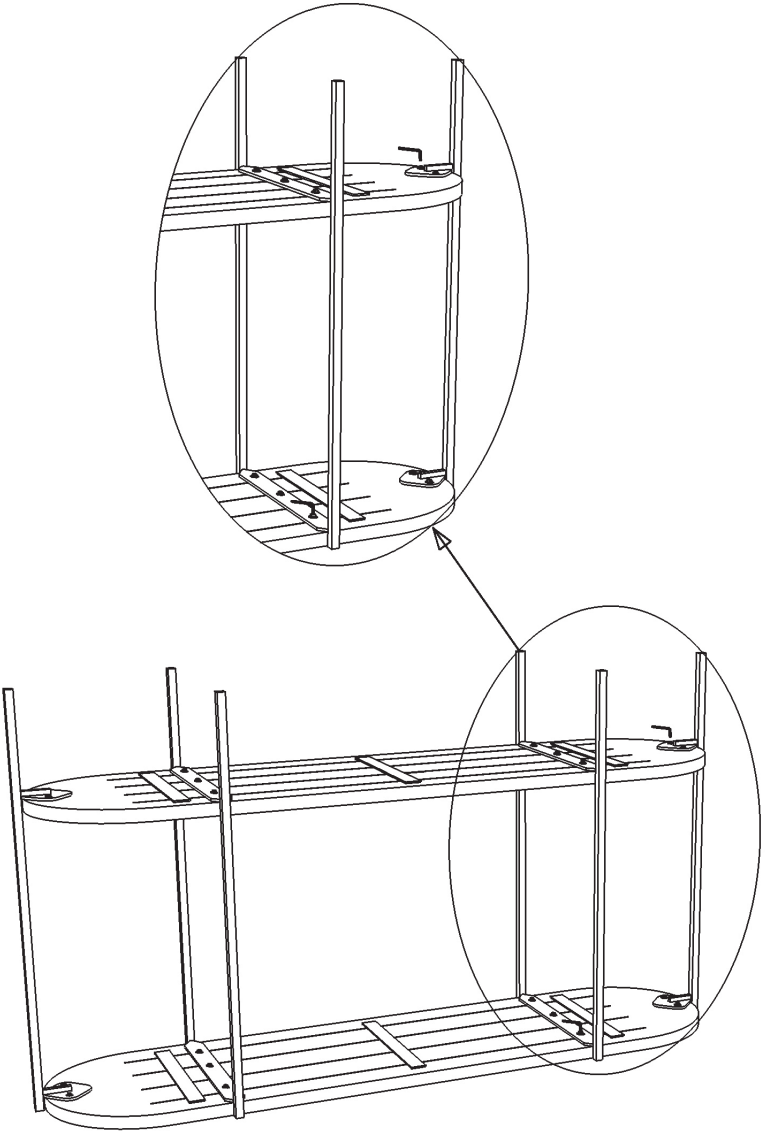
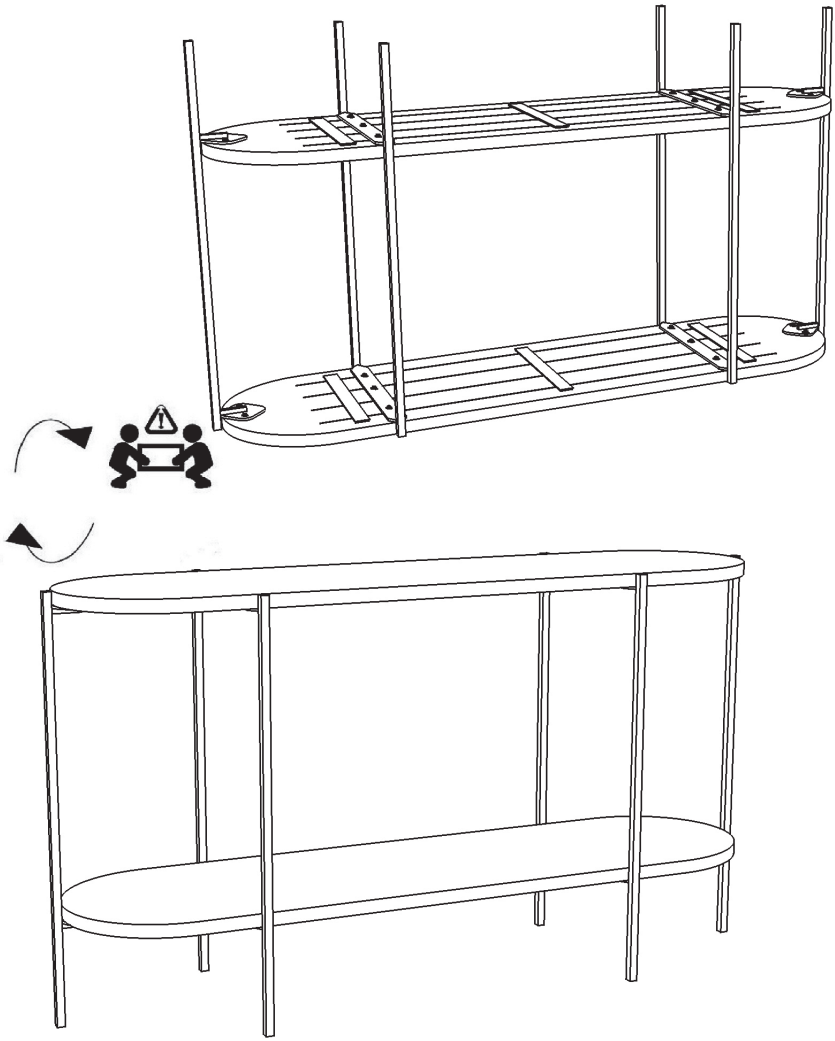
5