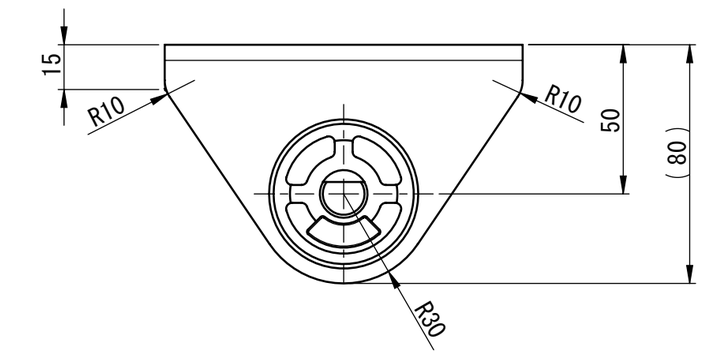

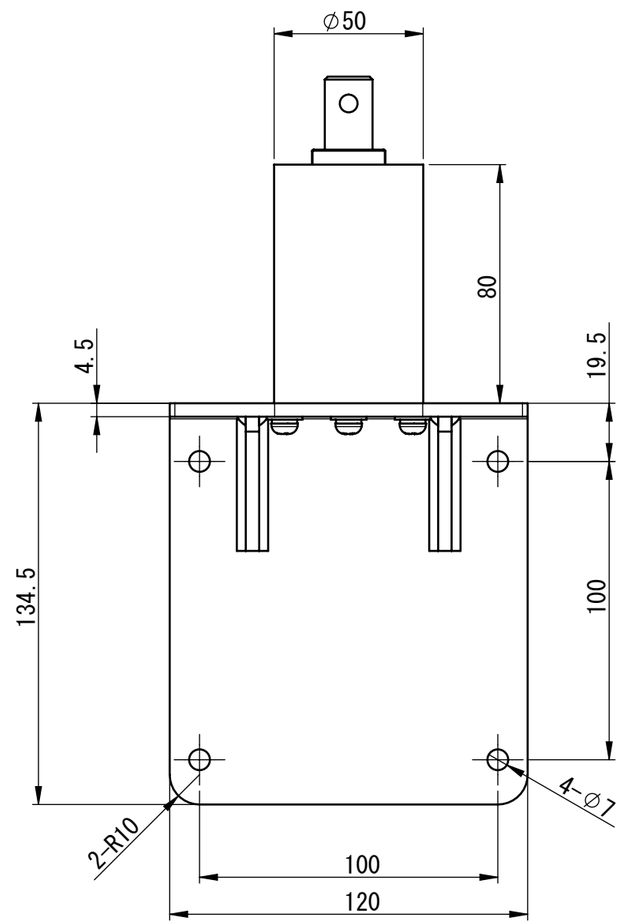

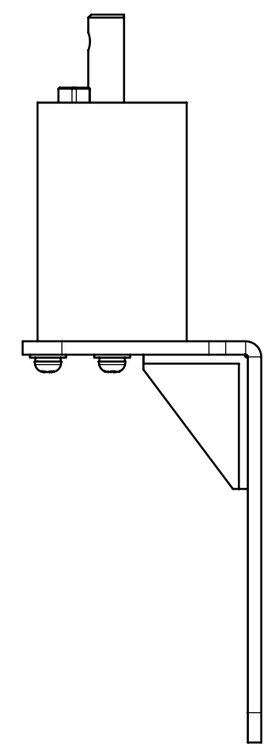

PS7-N902