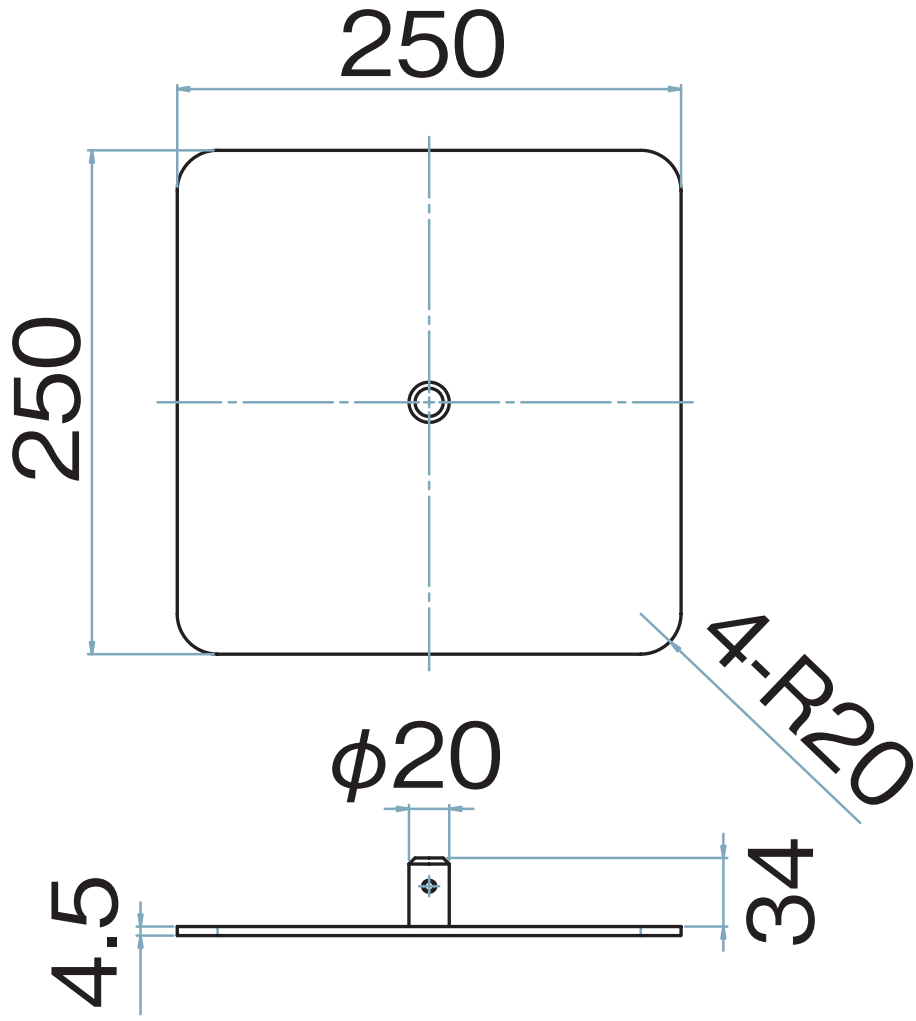
250
250
4-R20
ϕ20
4.5
34